HEAT-PAK®

DUAL OVERLAY SYSTEM

Installation Instructions

Important Notes

Carpet - Can be laid directly to the surface of Heat-Pak® , as the Depron below the carbon elements provides cushioning from step impacts. If you need to use an additional underlay ensure it has a low Tog rating, no greater than 0.75Tog, ideally 0.5 Tog. The greater the TOG rating the slower the heating system will react. For fixing carpet onto Heat-Pak® it is recommended to use a tackifier adhesive or the double stick method of carpet installation. If using the stretch method of installation the ***gripper must be installed before the Carbon Heating System.*** In order for the gripper to function correctly the top surface of the gripper should be level with the top surface of the Heat-Pak® or underlay. This can be achieved either by using an architectural gripper or a timber spacer under a conventional gripper to raise it to the correct level.

Heat-Pak® Instructions for Installation Over Carbon Film

Heat-Pak® boards must acclimatise in their sealed packaging, in the room where they are to be fitted, for at least 48 hours, at a temperature of at least 18°C. Before fitting Heat-Pak® over a carbon heating system, a polythene moisture barrier sheet must be laid. This should be of a minimum thickness of 200 microns / 800 gauge and any joints must be overlapped by at least 200mm. The joints must be sealed over their total length with a self-adhesive PVC cloth tape (Duct Tape). Refer to carbon film installation instructions.
Before starting your installation of Heat-Pak® ensure your sub-floor is permanently dry, clean and free of dust.

* Cutting Heat-Pak®, we recommend that you use a Retractable bladed knife or similar and a straight-edge. Score the boards two or three times and then snap along the cut. This avoids making sawdust which would prevent the adhesive from bonding correctly.

Installation Overview

The Heat-Pak® system consists of two self-adhesive components, baseboards and top boards, which bond to each other. **Heat-Pak® is a floating sub-floor. It is not fixed to the floor below**. Each layer is laid out with staggered joints and arranged so that the top boards overlap the joints in the baseboards. Baseboards are thinner and have a protective plastic film to keep the self-adhesive coating clean. This is laid facing upwards and the film is left in place until cutting and fitting is completed. The top boards are thicker and have no plastic film over the adhesive coating. They are carefully positioned, adhesive side down, so that they overlap all the baseboard joints. It is important to check that any trimming of the top board is accurate and that the adhesive coating is free from dust or fragments before removing just sufficient amount of the protective film from the baseboards to allow the top board to be bonded in place. The adhesive will allow adjustments to be made for accurate positioning until pressure is applied. Tapping down with a rubber mallet will ensure close contact of the adhesive coatings and produce a strong, permanent bond. Take care to position boards accurately as it is very difficult to separate them once bonded.

The heating system must be switched off before installing Heat-Pak®. If the floor finish is to be glued to the Heat-Pak® , the system must not be switched back on until the glue has set completely. Temperatures should then be increased gradually.

Heating System Floor Sensor Installation

Special attention should be made to the location of the floor sensor. It should be installed as close to the surface as possible and be located in an area over a heating element in order to achieve accurate control, See Fig. 4. A 5mm wide groove should be formed in the top board layer of the Heat-Pak® to take the tip of the sensor and allow the cable to run to the 50mm gap at the edge of the room where the cold tails are located Fig. 1. If the final floor finish is to be vinyl or similar the groove and sensor should be covered with flexible filler Fig 5. Care should be taken to select filler that will not react with the floor finish.

Detailed Installation Fig. 2

Baseboard, first row The first row of baseboards is created by splitting* boards in half lengthways and turning the cut edges towards the wall. The first piece Ⓐ is shortened to 3/4 of its length with both cut edges against the walls in the corner. Lay out the other Ⓑ pieces end to end in a line along the wall, adhesive side up, leaving the protective film in place. Leave an expansion gap of 8-10 mm all around the perimeter and around pipes and other fixed objects, this also applies to the final floor finish.

Baseboard, second row Boards in the second row are laid out in the same direction as the first row. Start by cutting a board to 1/4 of its length and place this piece, Ⓒ with the cut end to the wall, next to the first row. Now place a full sized baseboard Ⓓ end to end with it and alongside the first row. The large off-cut Ⓔ will be used to start the third row of baseboards.
Do not remove the protective film at this stage and keep the job clean and free from dust.

Top boards, first row The top boards are laid in the same direction as the baseboards, but with the adhesive side down. The first board of this row is full size and positioned into the corner overlapping both the first and second rows of baseboards. If the board fits neatly into the corner no trimming is required, in which case it can be lifted out and the plastic film can be peeled back from the baseboards that it will cover. Avoid removing more film than is necessary to accommodate the top board on the adhesive. The top board is carefully repositioned and adjusted for alignment, at the same time the baseboards should be checked for any gaps and adjusted if required; finally the top board is fixed in place by tapping down with the rubber mallet.

Top boards, second row For the best result it is important to keep the joints between the top boards as tight as possible. The easiest way to achieve this is by starting the second row of top boards with a half length piece, followed by a full board and pushing all the edges tightly together before tapping down. Adding further boards, alternately, to the first two rows keeps the lines straight and so prevents gaps from developing.
Vacuum clean the finished Heat-Pak® sub floor before fitting the floor covering. When vinyl floor coverings are to be glued onto Heat-Pak®, fit the Heat-Pak® 24 hours before. For the best result and because of possible influences of air humidity, glue the floor covering on the Heat-Pak® no later than 48 hours.

For run lengths over 10 m length, add 1mm per extra meter to the expansion gap around the perimeter of the room. Maximum length 12m. Every room is to be fitted separately, leaving an expansion gap of at least 8 -10 mm and 16mm in door openings when Heat-Pak® is continued in the adjoining area. The floor covering is to be glued onto the total surface of the Heat-Pak® and is not to exceed the edges of the Heat-Pak®.

Tap or roll all the top boards with a rubber mallet or a 75 kg roller. Always
check the finished Heat-Pak® sub floor for irregularities. Any irregularities of the joints can easily be sanded away with a 120-grain fine sand paper. Fig 6.

Fig. 1

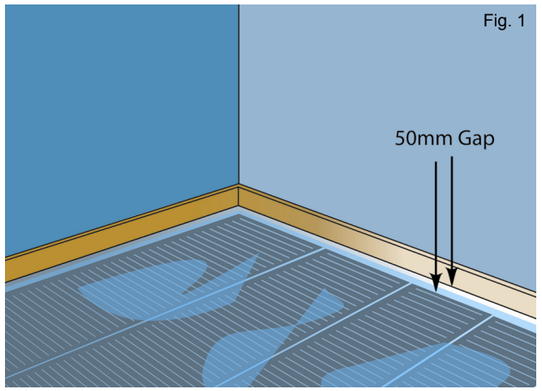

Fig. 2

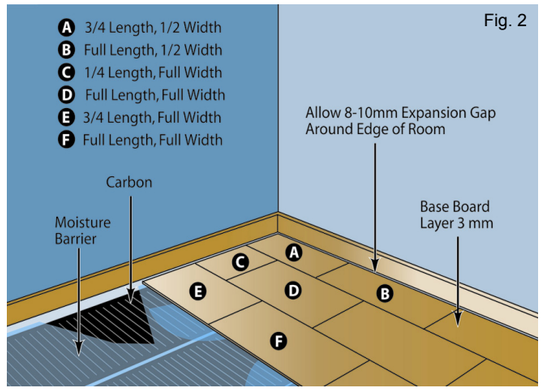

Fig. 3

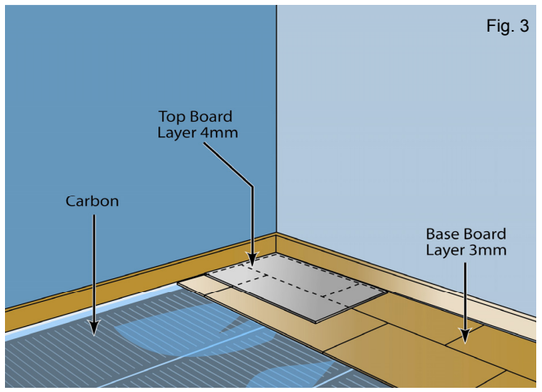

Fig. 4

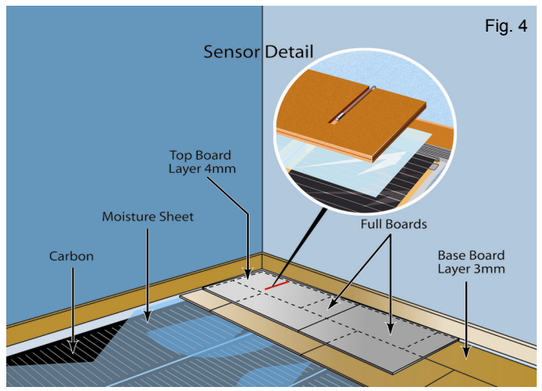

Fig. 5

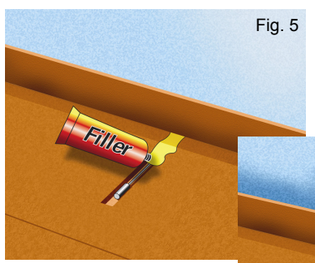

Fig. 6

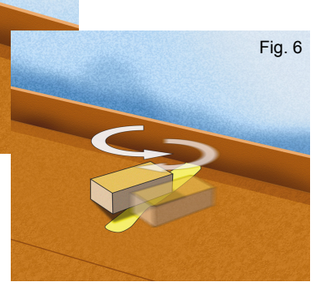
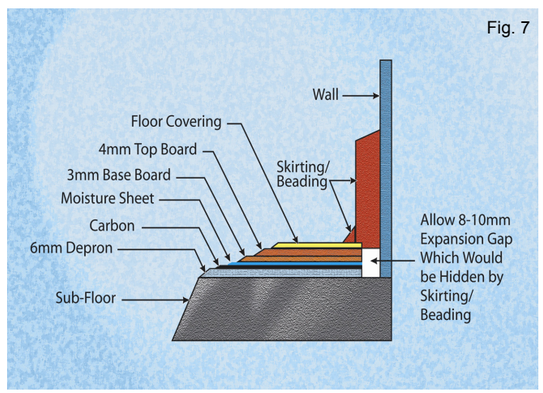
Fig. 7